## * D-flipflop

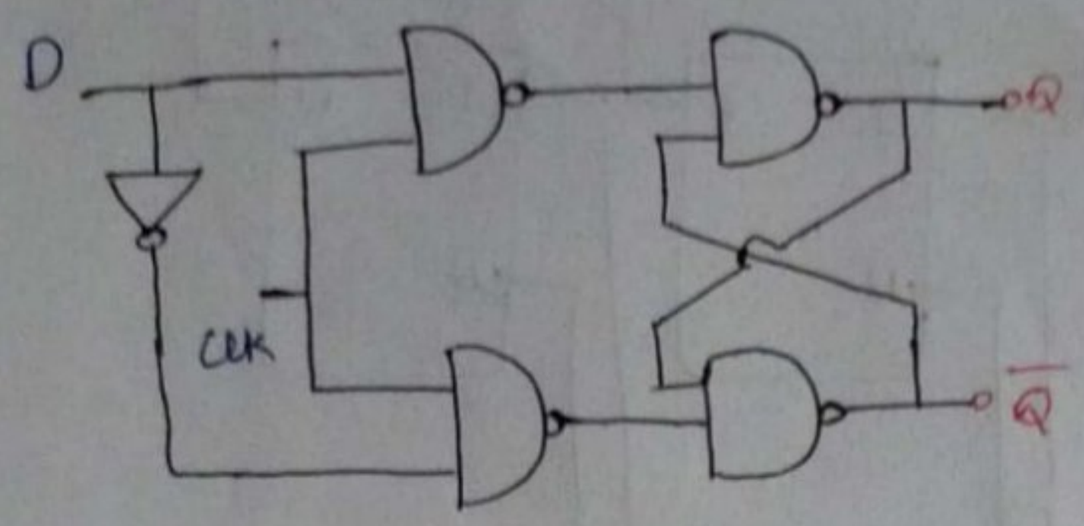


logic diagram.

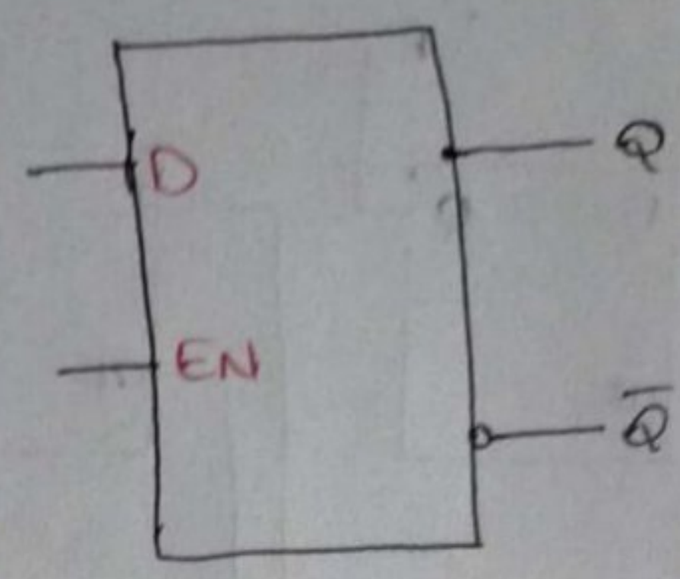


logic symbol.

state table

| Present state | Input | Next state |
|---|---|---|
| Q | D | Q(t+1) |
| 0 | 0 | 0 |
| 0 | 1 | 1 |
| 1 | 0 | 0 |
| 1 | 1 | 1 |

$\overline{D}$=S D=R

| S | R | Q |
|---|---|---|
| 1 | 0 | 1 |
| 0 | 1 | 1 |
| 1 | 1 | No chang |
| 0 | 0 | X |

## * D flipflop [IC 7474]

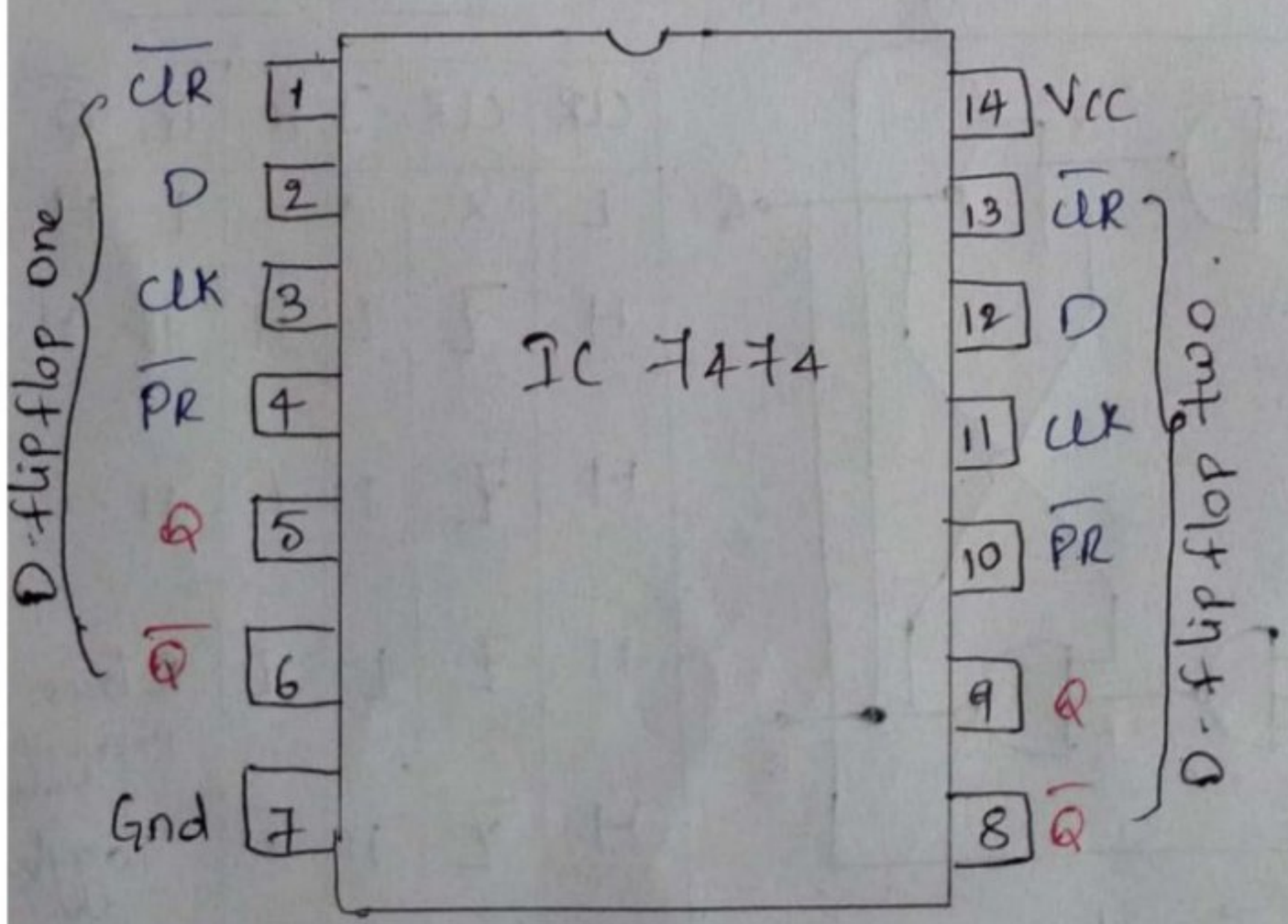


Truth Table.

| Inputs | | | | outputs | |
|---|---|---|---|---|---|
| PR | CLR | clk | D | Q | $\overline{Q}$ |
| L | H | X | X | H | L |
| H | L | X | X | L | H |
| L | L | X | X | H | H |
| H | H | ↑ | H | H | L |
| H | H | ↑ | L | L | H |
| H | H | L | X | $Q_0$ | $\overline{Q_0}$ |

CLR - clears the o/p to zero
PR - sets the o/p to one dual functionality

Scanned with CamScanner
Scanned with OKEN Scanner
Scanned with OKEN Scanner

## * Delay flip flop [4-Bit Data Input] 4-Bit Data output

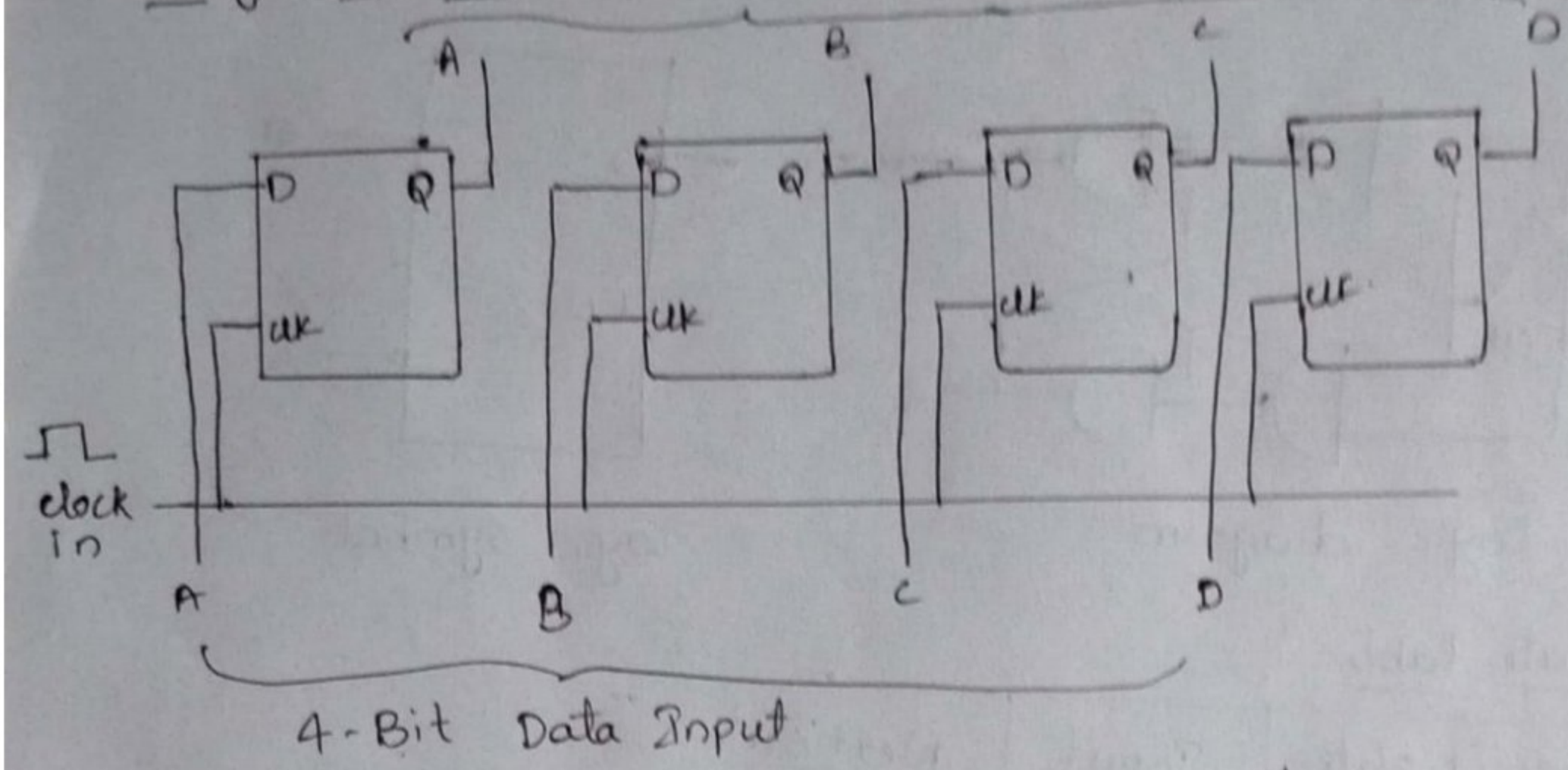


## * IC 7473 [JK Master slave flip flop].

The master slave flip flop eliminates all the timing problems. The one flip flop acts as a Master ckt while the other acts as slave.

The TTL 74LS73 is a Dual JK flip flop IC, which contains two individual JK type bistable's within a single chip enabling single or master-slave toggle flip-flops to be made.

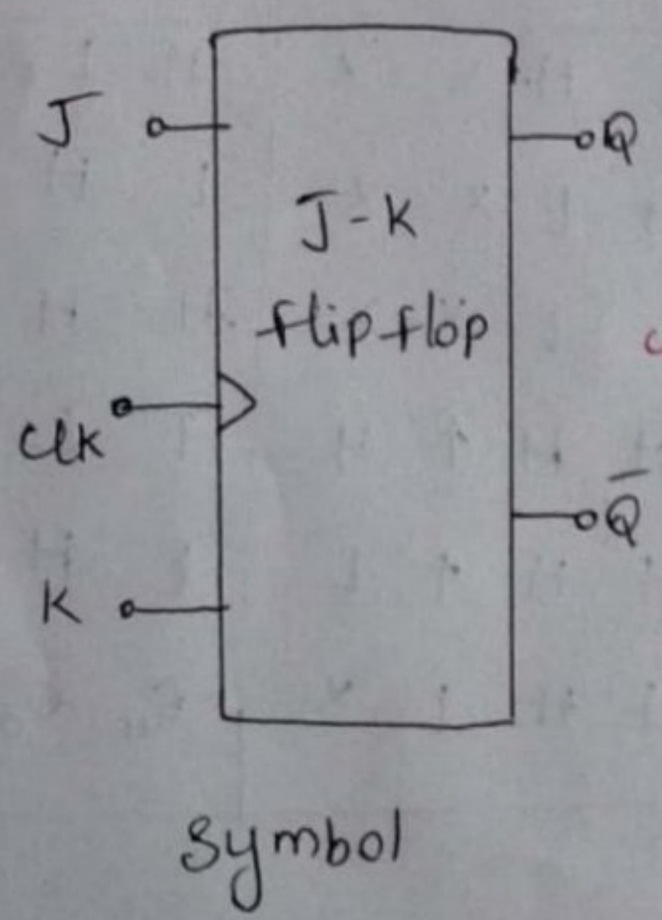


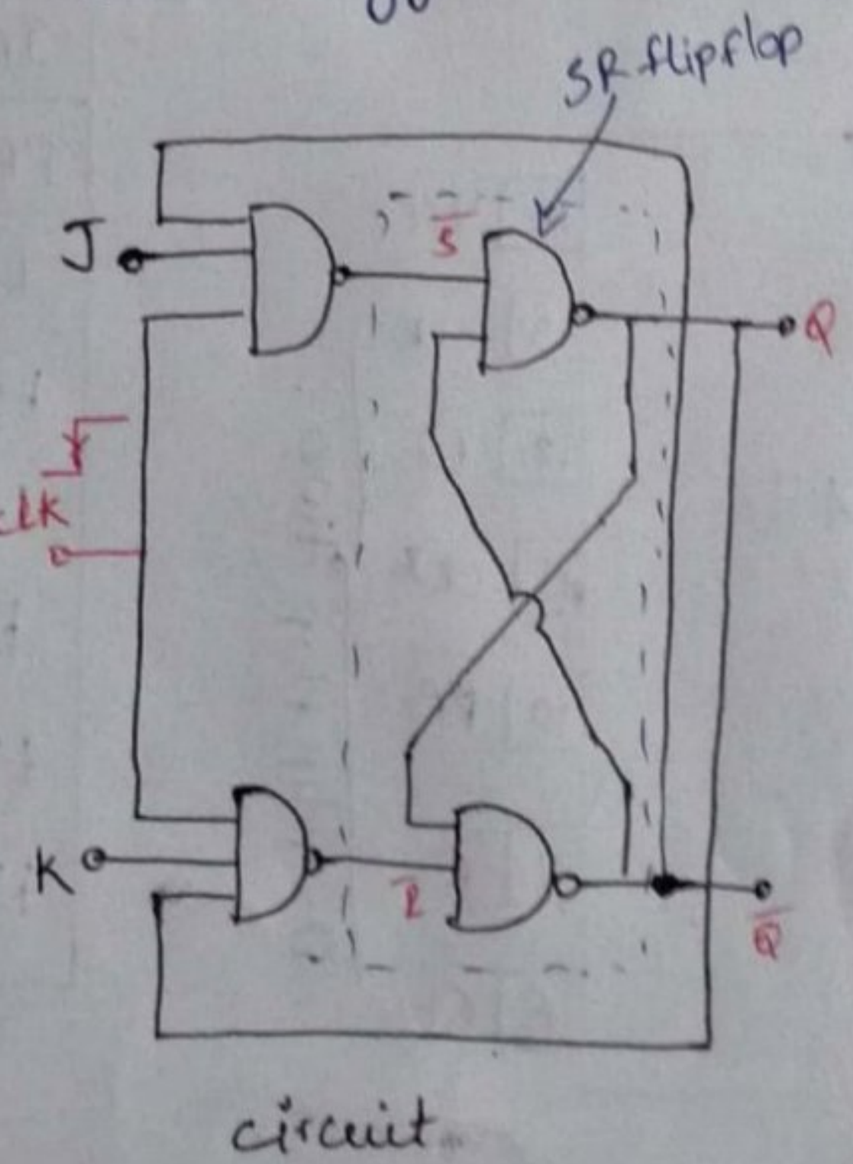


### Truth Table.

| CLR | CLK | J | K | Q | $\bar{Q}$ |
|---|---|---|---|---|---|
| L | X | X | X | L | H |
| H | ↓ | L | H | L | H |
| H | ↓ | H | L | H | L |
| H | ↓ | L | L | Retains previous state | |
| H | ↓ | H | H | Toggle | |

Scanned with CamScanner

Scanned with OKEN Scanner
Scanned with OKEN Scanner

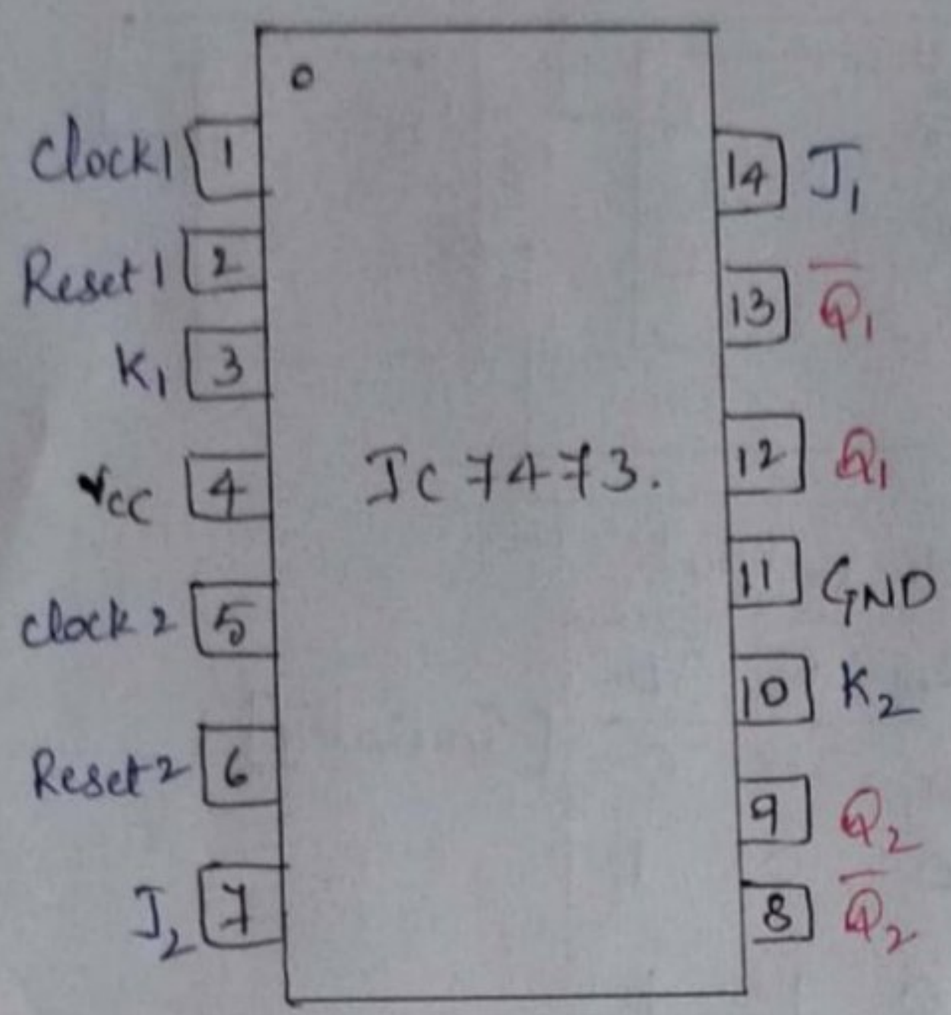


Pin diagram

* Shif Register :-

The movement of the bits or data

- classification based on the direction of data movement
  1. shift left Register
  2. shift right Register
- classification based on the mode of input and output
  1. SISO [Serial in Serial out Shift Register]
  2. SIPO [Serial in parallel out shift Register]
  3. PISO [parallel in serial out shift Register]
  4. PIPO [parallel in parallel out Shift Register]
  5. Universal shift Register.

* Shift left Register :-

Generally D-flip flop is used for the operation of Shift register.

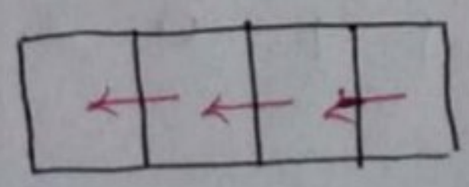

Scanned with CamScanner

Scanned with OKEN Scanner
Scanned with OKEN Scanner

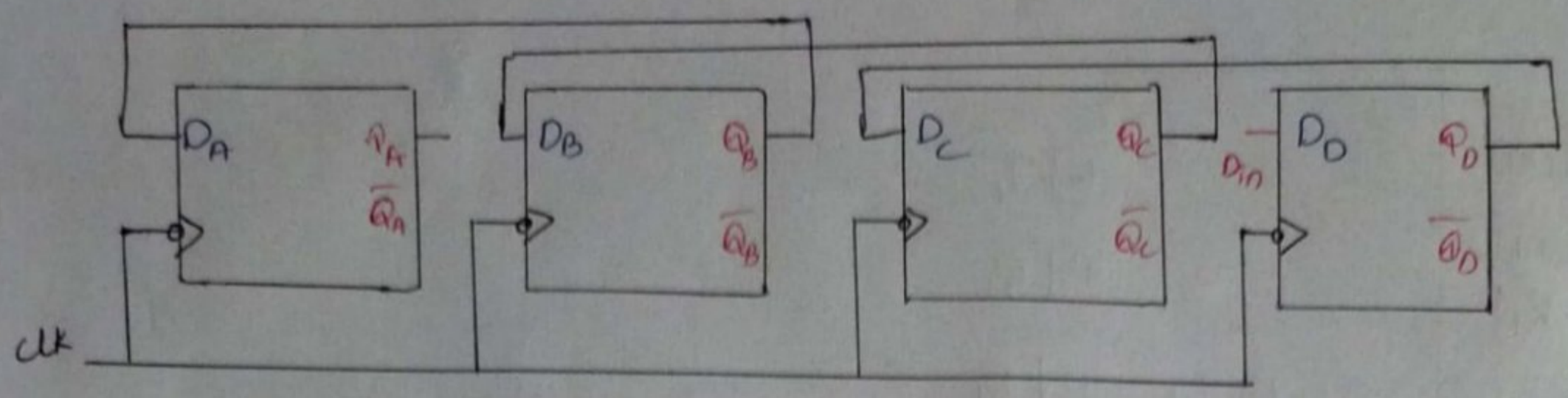


| clock | Input | flipflop output | | | | |
|---|---|---|---|---|---|---|
| | | $Q_A$ | $Q_B$ | $Q_C$ | $Q_D$ | [Initially] |
| | | 0 | 0 | 0 | 0 | |
| 1 | 1 | 0 | 0 | 0 | 1 | |
| 2 | 1 | 0 | 0 | 1 | 1 | |
| 3 | 1 | 0 | 1 | 1 | 1 | |
| 4 | 1 | 1 | 1 | 1 | 1 | |

* <u>Shift</u> <u>Right</u> :-

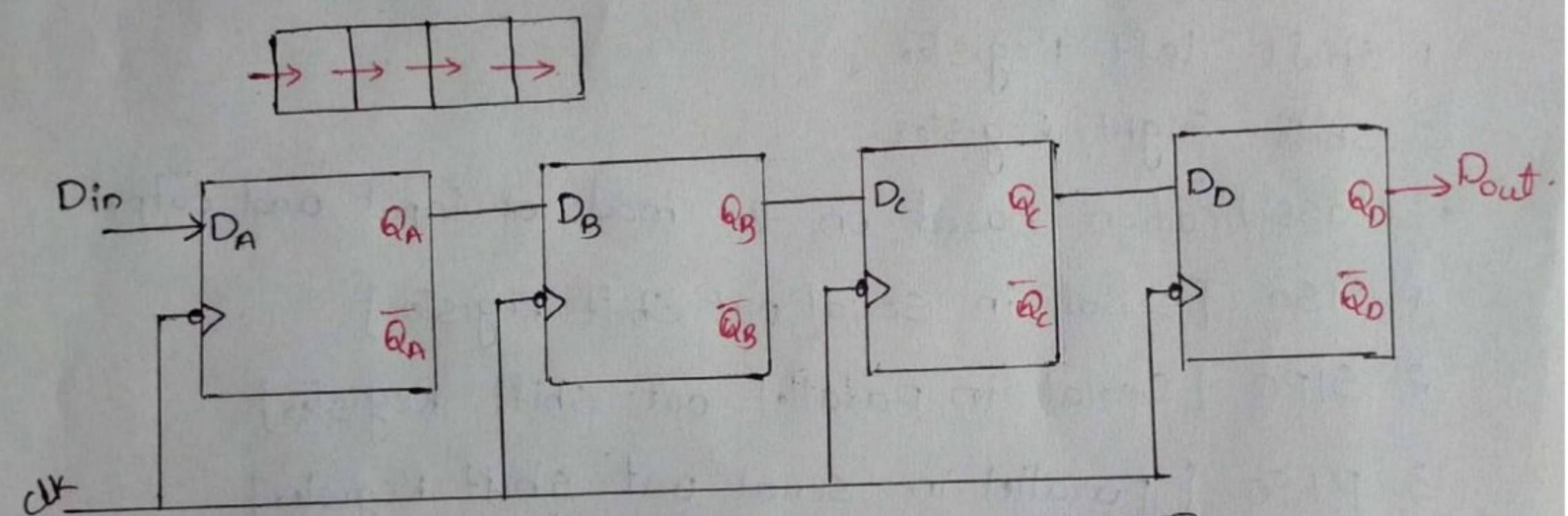


| clock | Input | flipflop output | | | | |
|---|---|---|---|---|---|---|
| | | $Q_A$ | $Q_B$ | $Q_C$ | $Q_D$ | [Initial] |
| | | 0 | 0 | 0 | 0 | |
| 1 | 1 | 1 | 0 | 0 | 0 | |
| 2 | 1 | 1 | 1 | 0 | 0 | |
| 3 | 1 | 1 | 1 | 1 | 0 | |
| 4 | 1 | 1 | 1 | 1 | 1 | |

Scanned with CamScanner

Scanned with OKEN Scanner

Scanned with OKEN Scanner

## * SISO [Serial In Serial output shift Register]

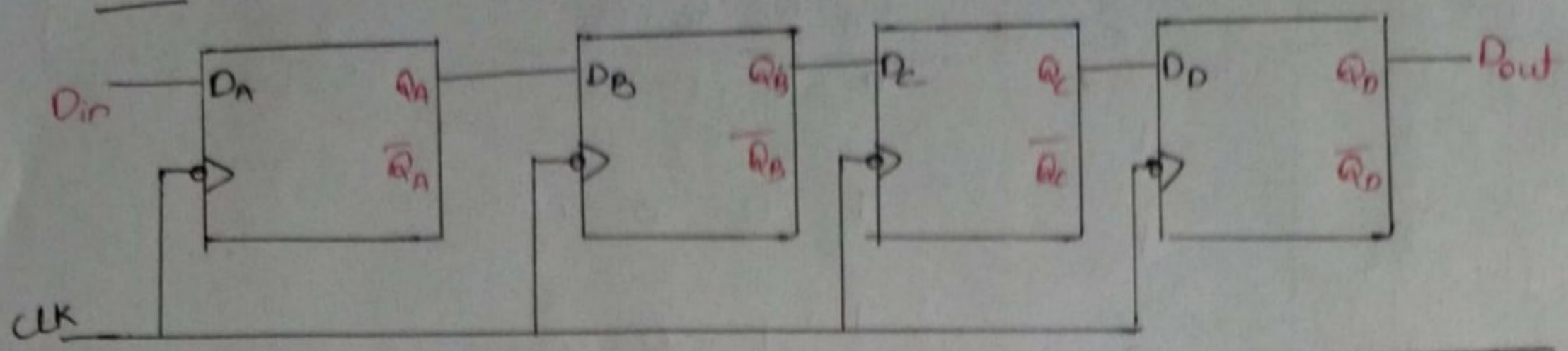


Ex:- Din 1011

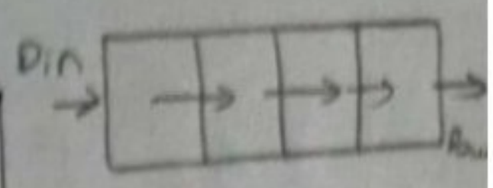


| clock | Din | output $Q_A$ | $Q_B$ | $Q_C$ | $Q_D$ | |
|---|---|---|---|---|---|---|
| | | 0 | 0 | 0 | 0 | |
| 1 | 1 | 1 | 0 | 0 | 0 | |
| 2 | 0 | 0 | 1 | 0 | 0 | |
| 3 | 1 | 1 | 0 | 1 | 0 | |
| 4 | 1 | 1 | 1 | 0 | 1 | |
| 5 | | 0 | 1 | 1 | 0 | 1 |
| 6 | | 0 | 0 | 1 | 1 | 0 |
| 7 | | 0 | 0 | 0 | 1 | 1 |
| 8 | | 0 | 0 | 0 | 0 | 1 |

Serial out

## * SIPO [Serial In parallel Out Shift Register]

Parallel out means at a time output should be obtained.

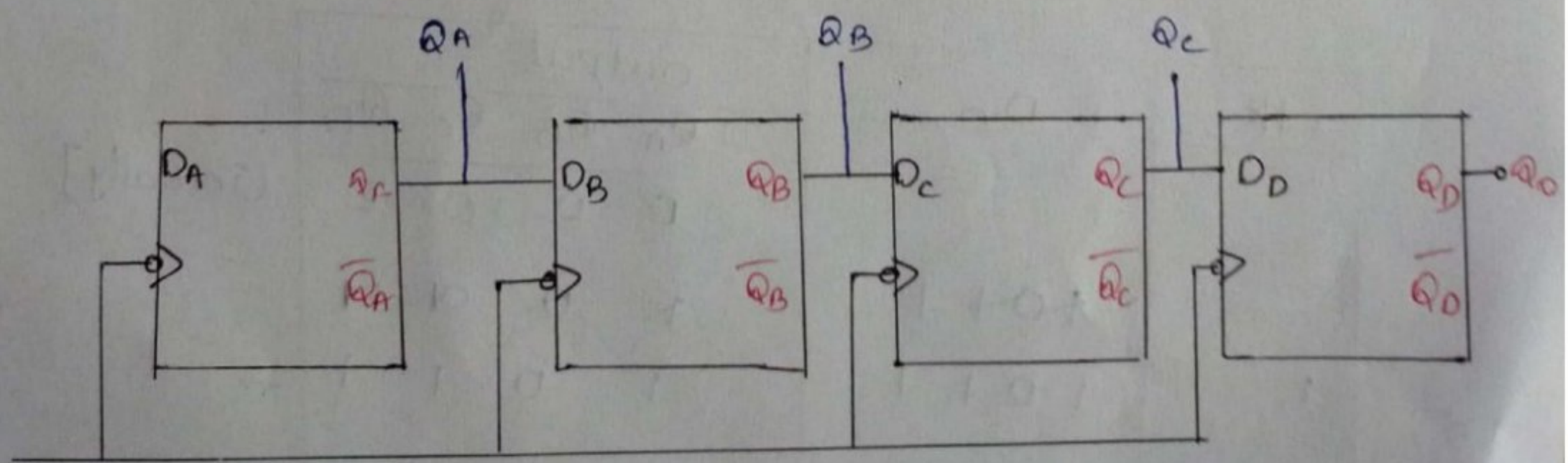


Scanned with CamScanner

Scanned with OKEN Scanner
Scanned with OKEN Scanner

| clk | Din | output | | | |
|---|---|---|---|---|---|
| | | $Q_A$ | $Q_B$ | $Q_C$ | $Q_D$ |
| | | 0 | 0 | 0 | 0 |
| 1 | 1 | 1 | 0 | 0 | 0 |
| 2 | 1 | 1 | 1 | 0 | 0 |
| 3 | 0 | 0 | 1 | 1 | 0 |
| 4 | 1 | 1 | 0 | 1 | 1 |
| 5 | | 0 | 0 | 0 | 0 |

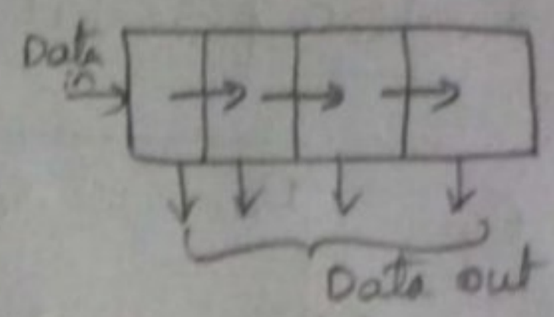


out.

SISO - MSB bit is entered first

SIPO - LSB bit is entered first.

* Parallel In parallel out shift Register [PIPO]

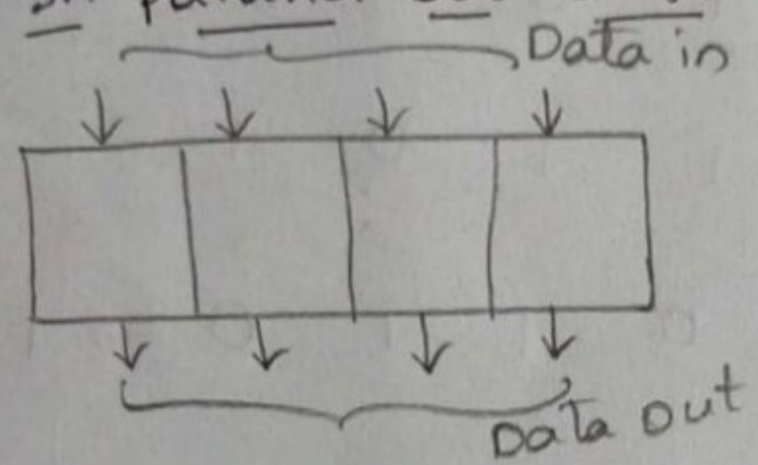


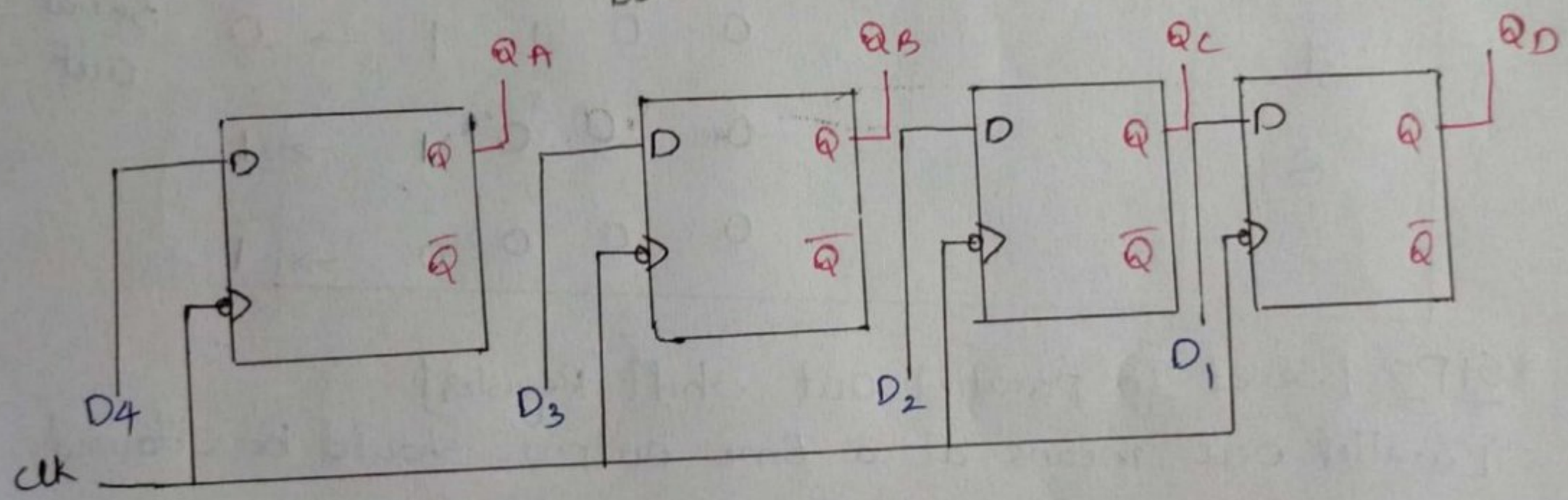


| clk | Din | output | | | |
|---|---|---|---|---|---|
| | | $Q_A$ | $Q_B$ | $Q_C$ | $Q_D$ |
| | | 0 | 0 | 0 | 0 |
| | ~~1011~~ | ~~1~~ | ~~0~~ | ~~0~~ | ~~0~~ |
| 1 | 1011 | 1 | 0 | 1 | 1 |
| 2 | | 0 | 0 | 0 | 0 |

(Initially)

→ out.

Scanned with CamScanner

Scanned with OKEN Scanner
Scanned with OKEN Scanner

## * PISO [Parallel Input Serial out Shift Register]

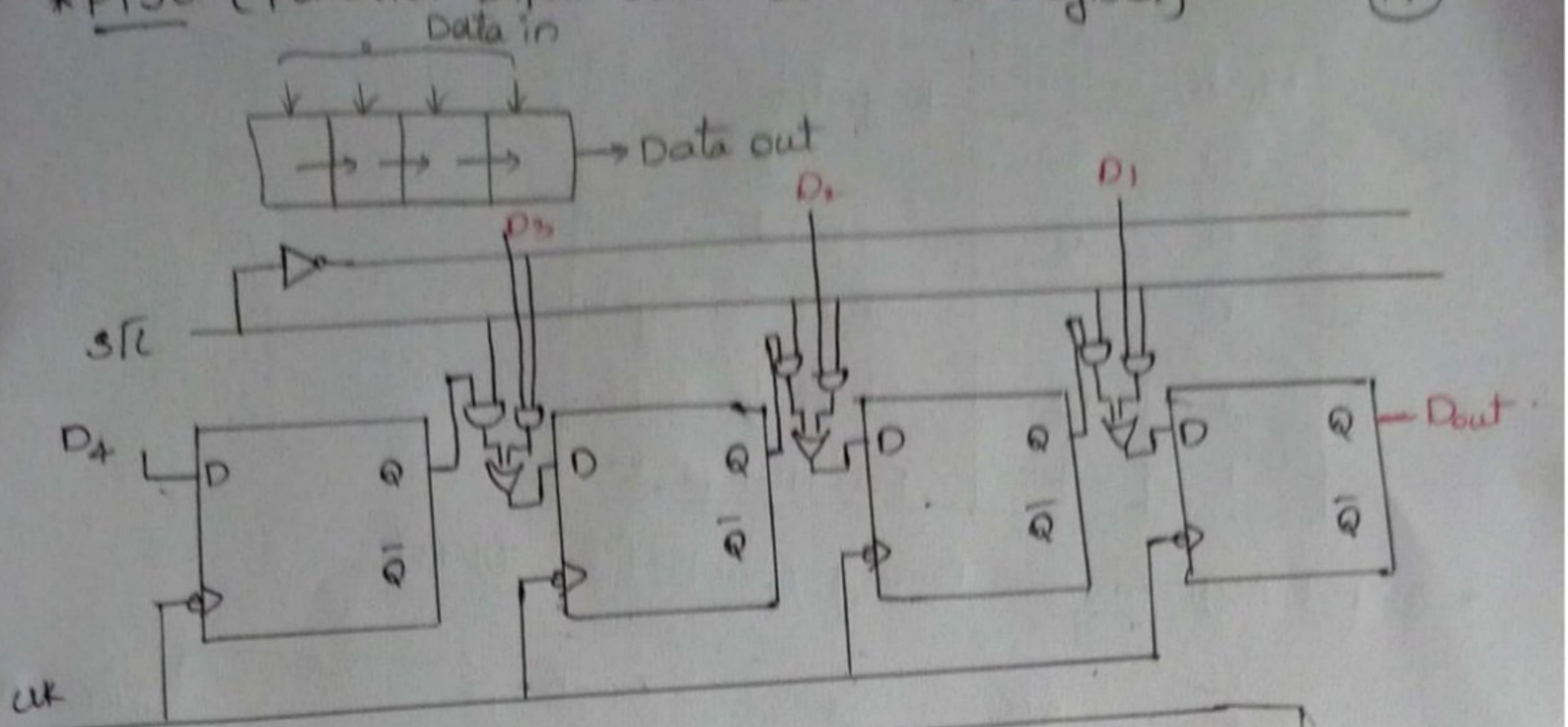


| clk | Input | output $Q_A$ | $Q_B$ | $Q_C$ | $Q_D$ | |
|---|---|---|---|---|---|---|
| | | 0 | 0 | 0 | 0 | |
| 1 | 1 1 0 1 | 1 | 1 | 0 | 1 | |
| 2 | | 0 | 1 | 1 | 0 | 1 |
| 3 | | 0 | 0 | 1 | 1 | 0 |
| 4 | | 0 | 0 | 0 | 1 | 1 |
| 5 | | 0 | 0 | 0 | 0 | 1 |

out

## * Universal shift Register :- [IC 74194]

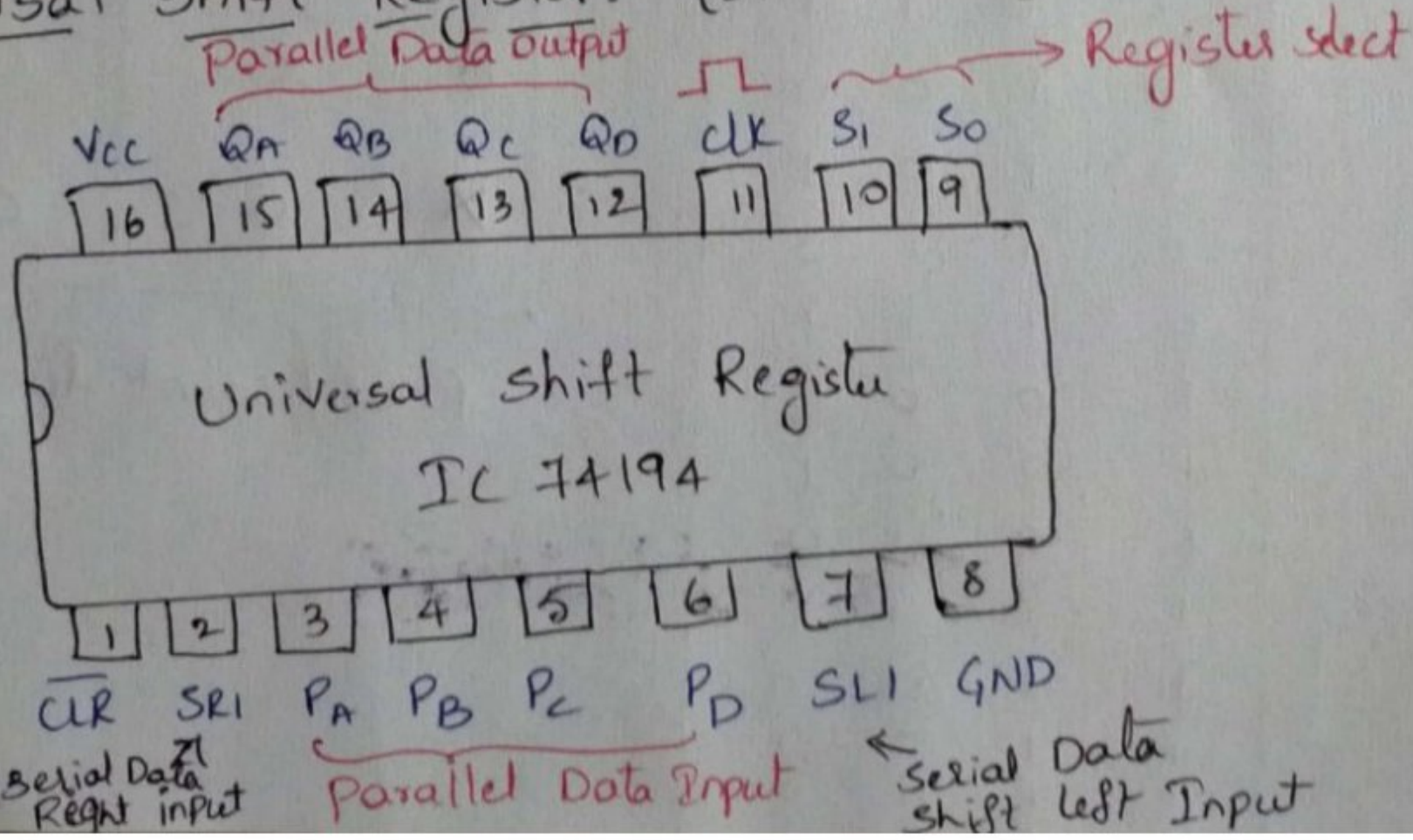


Scanned with CamScanner
Scanned with OKEN Scanner
Scanned with OKEN Scanner

| Mode control | | Register Type |
|---|---|---|
| $S_1$ | $S_0$ | |
| 0 | 0 | Hold |
| 0 | 1 | shift to right |
| 1 | 0 | shift to left |
| 1 | 1 | Parallel Mode. |

## * 4-bit Asynchronous Binary Counter [IC 7493]

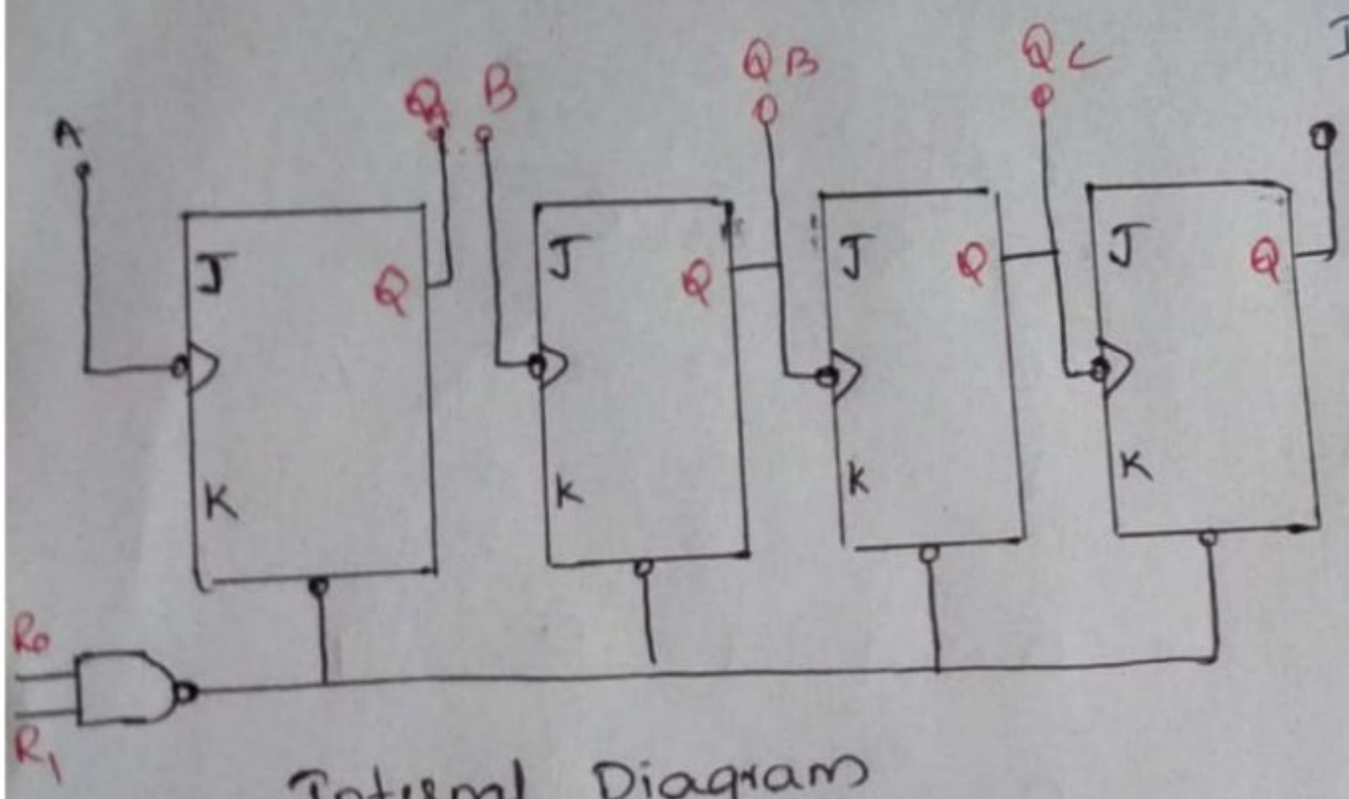


Internal Diagram

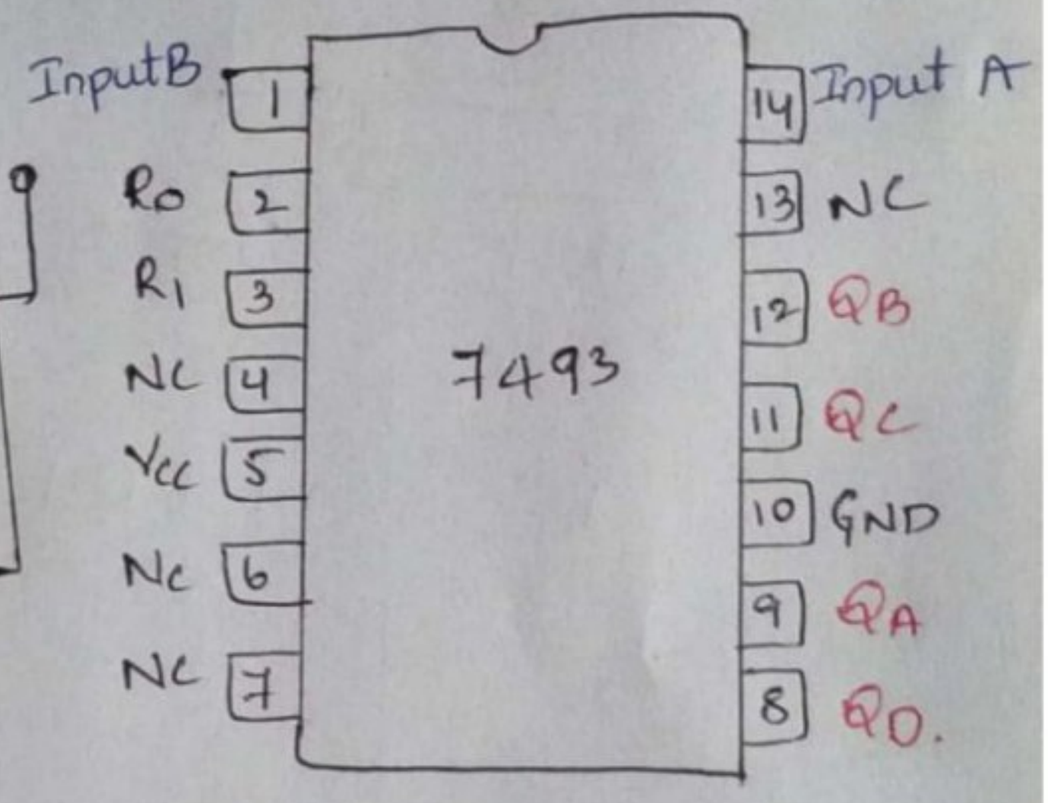


Pin diagram.

| Count | output | | | |
|---|---|---|---|---|
| | $Q_A$ | $Q_B$ | $Q_C$ | $Q_D$ |
| 0 | 0 | 0 | 0 | 0 |
| 1 | 0 | 0 | 0 | 1 |
| 2 | 0 | 0 | 1 | 0 |
| 3 | 0 | 0 | 1 | 1 |
| 4 | 0 | 1 | 0 | 0 |
| 5 | 0 | 1 | 0 | 1 |
| 6 | 0 | 1 | 1 | 0 |
| 7 | 0 | 1 | 1 | 1 |
| 8 | 1 | 0 | 0 | 0 |
| 9 | 1 | 0 | 0 | 1 |
| 10 | 1 | 0 | 1 | 0 |
| 11 | 1 | 0 | 1 | 1 |
| 12 | 1 | 1 | 0 | 0 |
| 13 | 1 | 1 | 0 | 1 |
| 14 | 1 | 1 | 1 | 0 |
| 15 | 1 | 1 | 1 | 1 |

| Reset Inputs | | output | | | |
|---|---|---|---|---|---|
| $R_0$ | $R_1$ | $Q_A$ | $Q_B$ | $Q_C$ | $Q_D$ |
| 1 | 1 | 0 | 0 | 0 | 0 |
| 0 | x | count | | | |
| x | 0 | count | | | |

Reset / count functional Table.

Scanned with CamScanner

Scanned with OKEN Scanner
Scanned with OKEN Scanner